MEMDOS KMS LB/LA

Motor piston diaphragm dosing pump

Extremely durable

The MEMDOS KMS LB/LA combines the leak tightness of a diaphragm dosing pump with the precision of a piston dosing pump, thereby guaranteeing reliable dosing.

The MEMDOS KMS LB/LA is a durable pump with a hydraulically-deflected diaphragm. The vertical hydraulic system is low-maintenance and does not require a complicated venting or re-filling mechanism. An integrated pressure control valve in the hydraulic unit opens in the event of an overload, ensuring safe operation. The pre-stressed pipe-form diaphragm automatically compensates unequal suction conditions. The dosing pump reaches a suction height of up to 5 m. The dosing quantity can be regulated easily in operation or during standstill via a control slide without altering the stroke length. This is either performed manually using the stroke length adjustment or with the help of a potentiometer or automatically via a frequency converter using a 0/4 – 20 mA signal.

Overview of functions

- Output range from 14 – 700 l/h, up to 200 bar
- Power supply 115 V, 230 V or 400 V
- Tool versions in stainless steel, cast iron, alloy 20 and PP
- Infinitely variable stroke frequency from 0 – 100 %
- Suitable for frequency converter operation
- Integrated hydraulic pressure-relief valve
- API 675 compliant
- Automatic stroke length adjustment (optional)

Application areas

- High-pressure applications
- Industrial chemical inflow
- Treatment of drinking water and wastewater
- Suspension processes
- Oil and gas production

safety is our concern

The durable one

MEMDOS KMS LB/LA - Motor piston diaphragm dosing pump 14 – 700 l/h, up to 200 bar

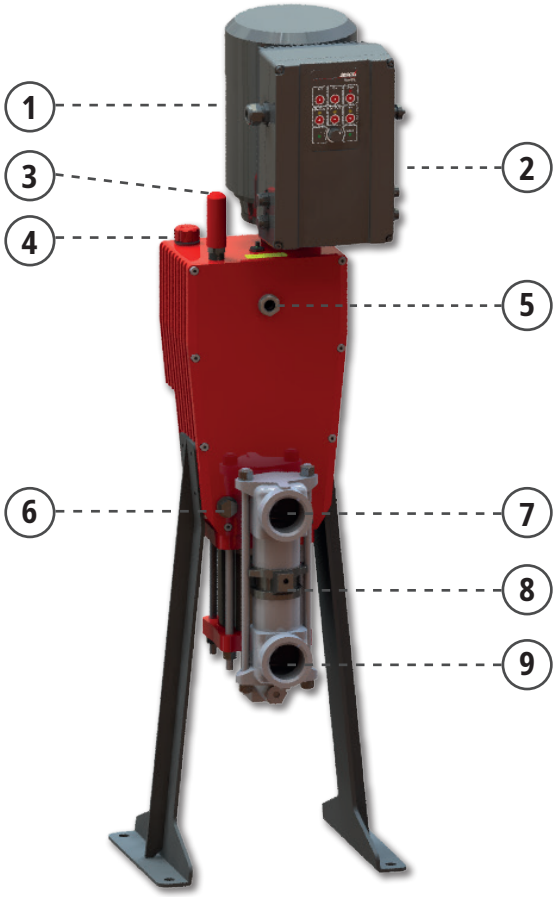

Structure of the MEMDOS KMS

1. Drive motor
2. Control (only LA)
3. Stroke length adjustment
4. Oil inlet
5. Oil level glass
6. Oil drain
7. Connection discharge side
8. Dosing head ventilation
9. Connection suction side

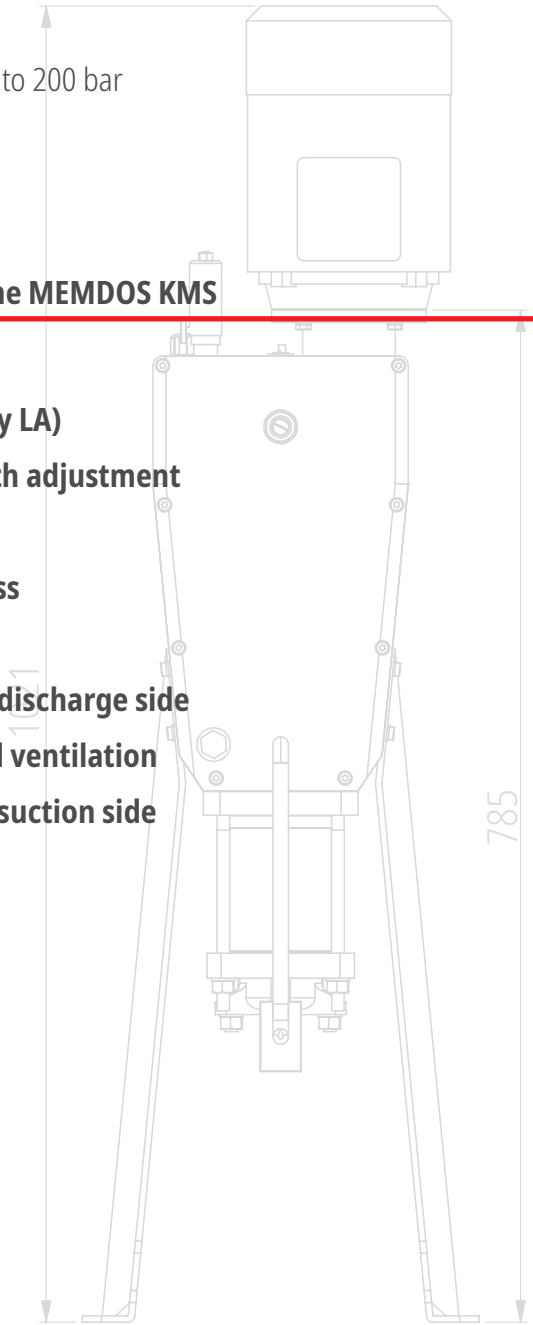

Dimensions

All dimensions in mm

Dosing head size	Dim. A	Dim. B
1/2"	325.2	438.3
1"	305.9	458.2
1 1/2"	271.7	453.2
2"	224.2	401.7

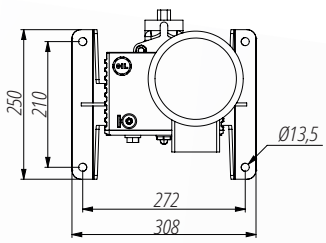

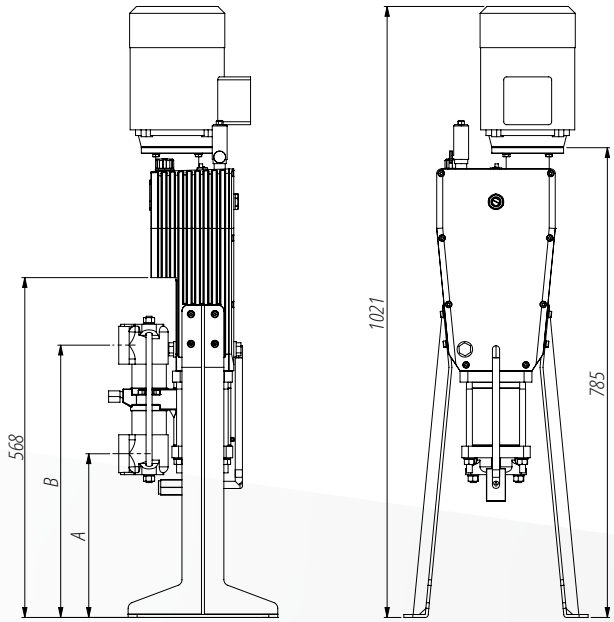

Operating modes	LB	LA
Manual with stroke length adjustment 0 – 100 %	•	•
Manual speed control 0 – 100 %	-	•
External control via standard signal 0/4 – 20 mA	-	•

Inputs and outputs	LB	LA
Release input (external start/stop)	-	•
Level input with early warning and main alarm	-	•
Stroke feedback output	-	•
Alarm relay output	-	•
Analogue output with standard signal 0/4 – 20 mA	-	•

Technical data

MEMDOS KMS LB/LA			14	20	30	60	100	140	200	285	400	320	500	700
Delivery capacity at max. backpressure	50 Hz	l/h	13.5	21	29.4	63.5	98.8	138	203	284	396	320.9	499.2	697
	60 Hz	l/h	16.2	25.2	35.2	76.2	118.5	165.6	243.6	340.8	475.2	385	599	836.4
	50 Hz	US gal/h	3.5	5.5	7.7	16.7	26	36.4	53.5	75	104.5	84.7	131.7	184
	60 Hz	US gal/h	4.2	6.6	9.2	20	31.3	43.7	64.3	90	125.4	101.6	158.1	184
Max. delivery pressure		bar	~200			~50			~20			~10		
		psig	3000			750			300			150		
Max. stroke frequency	50 Hz	rpm	83	130	181	83	130	181	83	130	181	83	130	181
	60 Hz	rpm	99	156	217	99	156	217	99	156	217	99	156	217
Suction lift for non-gassing media		mWS	5											
Max. supply pressure		mbar	500											
Piston diameter			1/2"			1"			1 1/2"			2"		
Nominal valve width			DN10			DN15			DN20			DN30		
Voltage supply	LB	Three-phase current	400/230 V 3ph - 50 Hz or 460/270 V 9 ph - 60 Hz or 400/230 V 3ph - 50 Hz or 460/270 V 3ph - 60 Hz (for Freq-converter operation)											
		Alternating current	230 V 1ph - 50 Hz or 120 V 1ph - 60 Hz											
	LA		230 V 1ph - 50/60 Hz or 208 V 1ph - 50/60 Hz											
Protection class			IP55											
Materials			1.4401 (stainless steel)											
Weight	LB	kg	51			53			60			70		
	LA	kg	56			58			64			73		
Approved ambient temperature		°C	5 – 45*											
		°F	41 – 113*											
Approved media temperature	FKM	°C	0 – 82											
	FKM	°F	32 – 180											
	CSM	°C	0 – 65											
	CSM	°F	32 – 150											
Relative humidity		%	max. 90											
Max. sound pressure level		dB(A)	57 – 65											
Viscosity limits		mPa·s	300**/1000***											

* Use of the dosing pump at ambient temperatures below 5 °C resp. 41 °F must be checked individually. In such cases, please contact the manufacturer.

** With a viscosity of ~300 mPa·s and above, you must use spring-loaded valves.

*** If the viscosity is above 1000 mPa·s, this must be checked individually and the stroke frequency must be between 50 and 100 strokes/min.

Follow us on:

Lutz-Jesco GmbH
Am Bostelberge 19 | D-30900 Wedemark | Phone: +49 5130 5802-0 |E-Mail: info@lutz-jesco.com | www.lutz-jesco.com