Flow controller
DFR 45
Operating instructions

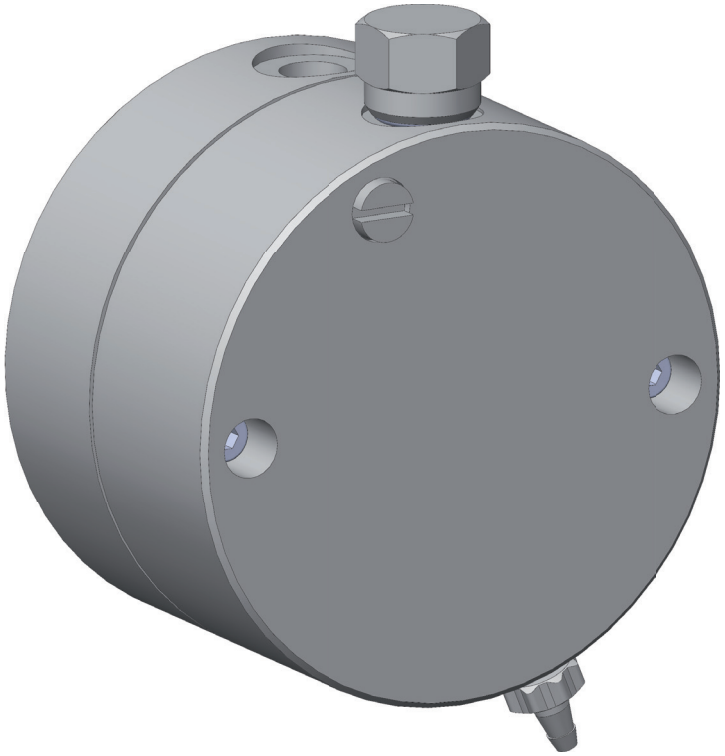

Read the operating manual!

The user is responsible for installation and operation related mistakes!

Original operating instructions

BA-43900-02-V02

Dosing | Liquids
Conveying | Gases
Control | Systems

Table of Contents

1 Notes for the Reader

This operating manual contains information and behaviour rules for the safe and designated operation of the device.

Observe the following principles:

- read the entire operating instructions prior to inaugurating the device.
- ensure that everyone who works with or on the device has read the operating manual and follows it.
- Maintain the operating manual throughout the service life of the device.
- Pass the operating manual on to any subsequent owner of the device.

1.1 General non-discrimination

In this operating manual, only the male gender is used where grammar allows gender allocation. The purpose of this is to make the text easy to read. Men and women are always referred to equally. We would like to ask female readers for understanding of this text simplification.

1.2 Explanation of the signal words

Different signal words in combination with warning signs are used in this operating manual. Signal words illustrate the gravity of possible injuries if the risk is ignored:

Signal word	Meaning
DANGER!	Refers to imminent danger. Ignoring this sign may lead to death or the most serious injuries.
WARNING!!	Refers to a potentially hazardous situation. Failure to follow this instruction may lead to death or severe injuries.
CAUTION	Refers to a potentially hazardous situation. Failure to follow this instruction may lead to minor injury or damage to property.
Note	Refers to a danger which, if ignored, may lead to risk to the machine and its function.

Table 1: Explanation of the signal words

1.3 Explanation of the warning signs

Warning signs represent the type and source of a danger:

Warning sign	Type of danger
	Danger of damage to machine or functional influences

Table 2: Explanation of the warning signs

1.4 Identification of warnings

Warnings are intended to help you recognise risks and avoid negative consequences.

This is how warnings are identified:

Warning sign	**SIGNAL WORD**
Description of danger. Consequences if ignored. ⇨ The arrow signals a safety precaution to be taken to eliminate the danger.	

1.5 Instruction for action identification

This is how pre-conditions for action are identified:

✓ Pre-condition for action which must be met before taking action.

🛠 A resource such as a tool or auxiliary materials required to perform the operating instructions.

This is how instructions for action are identified:

➔ Separate step with no follow-up action.

1. First step in a series of steps.
2. Second step in a series of steps.

▸ Result of the above action.

✓ **Action completed, aim achieved.**

2 Safety

2.1 General warnings

The following warnings are intended to help you eliminate the dangers that can arise while handling the device. Risk prevention measures always apply regardless of any specific action.

Safety instructions warning against risks arising from specific activities or situations can be found in the respective sub-chapters.

Note

Damage from excess temperatures

The materials used (PVC and PVDF) can deform above certain temperatures. This can cause irreparable damage to the flow controller.

⇨ Follow the specifications in Chapter 8 „Technical data“ on page 14.

⇨ Do not expose the flow controller to any temperatures above 40 °C (PVC version) or 60 °C (PVDF version).

2.2 Hazards due to non-compliance with the safety instructions

Failure to follow the safety instructions may endanger not only persons, but also the environment and the device.

The specific consequences can be:

- failure of important functions of the device and of the corresponding system,
- Failure of required maintenance and repair methods.

2.3 Working in a safety-conscious manner

Besides the safety instructions specified in this operating manual, further safety rules apply and must be followed:

- accident prevention regulations
- safety and operating provisions,
- safety regulations on handling hazardous substances,
- environmental protection provisions,
- applicable standards and legislation.

2.4 Personnel qualification

Any personnel who work on the device must have appropriate special knowledge and skills.

Anybody who works on the device must meet the conditions below:

- attendance at all the training courses offered by the owner,
- personal suitability for the respective activity,
- sufficient qualification for the respective activity,
- training in how to handle the device,
- knowledge of this operating manual, particularly of safety instructions and sections relevant for the activity,
- knowledge of fundamental regulations regarding health and safety and accident prevention.

All persons must generally have the following minimum qualification:

- training as specialists to carry out work on the device unsupervised,
- sufficient training that they can work on the device under the supervision and guidance of a trained specialist.

These operating instructions differentiate between these user groups:

2.4.1 Specialist staff

Thanks to their professional training, knowledge, experience and knowledge of the relevant specifications, specialist staff are able to perform the job allocated to them and recognise and/or eliminate any possible dangers by themselves.

2.4.2 Trained persons

Trained persons have received training from the operator about the tasks they are to perform and about the dangers stemming from improper behaviour.

Trained persons have attended all trainings offered by the operator.

2.4.3 Personnel tasks

In the table below you can check what qualifications are the pre-condition for the respective tasks. Only people with appropriate qualifications are allowed to perform these tasks!

Qualification	Activities
Trained persons	Installation, start-up and operation
Specialist staff	Maintenance

Table 3: Personnel qualification

3 Intended use

3.1 Notes on product warranty

Any non-designated use of the device can impair its function and the protection provided. This leads to invalidation of any warranty claims!

Please note that liability is on the side of the user in the following cases:

- the device is operated in a manner which is not consistent with these operating instructions, particularly safety instructions, handling instructions and chapter 3 „Intended use“ on page 7
- Information on usage and environment (see section 8 „Technical data“ on page 14) is not adhered to.
- if people operate the device who are not adequately qualified to carry out their respective activities.
- No original spare parts or accessories of Lutz-Jesco GmbH are used.
- Unauthorised changes are made to the device.
- The user uses different dosing media than those indicated in the order.
- Maintenance and inspection intervals are not adhered to as required or not adhered to at all.
- The device is commissioned before it or the corresponding system has been correctly and completely installed.

3.2 Intended purpose

The flow controller is a fitting designed for the regulation of a water flow with fluctuating water pressure in the piping system. The establishment of a constant water flow can increase the measurement accuracy of measuring cells for the analysis of water parameters.

A setting screw enables exact adjustment of the throughflow volume. The flow controller can also be fitted with a temperature sensor and is fitted with a valve for easy removal of water samples.

3.3 Prohibited dosing media

The device may not be used for media and substances which could attack and damage the materials used (see Chapter 13 "Technical data" on page 19). Please consult the manufacturer for further information.

4 Product description

4.1 Scope of delivery

Please compare the delivery note with the scope of delivery. The following items are part of the scope of delivery:

- Flow controller
- Fixing screws
- Operating instructions

4.2 The structure of the flow controller

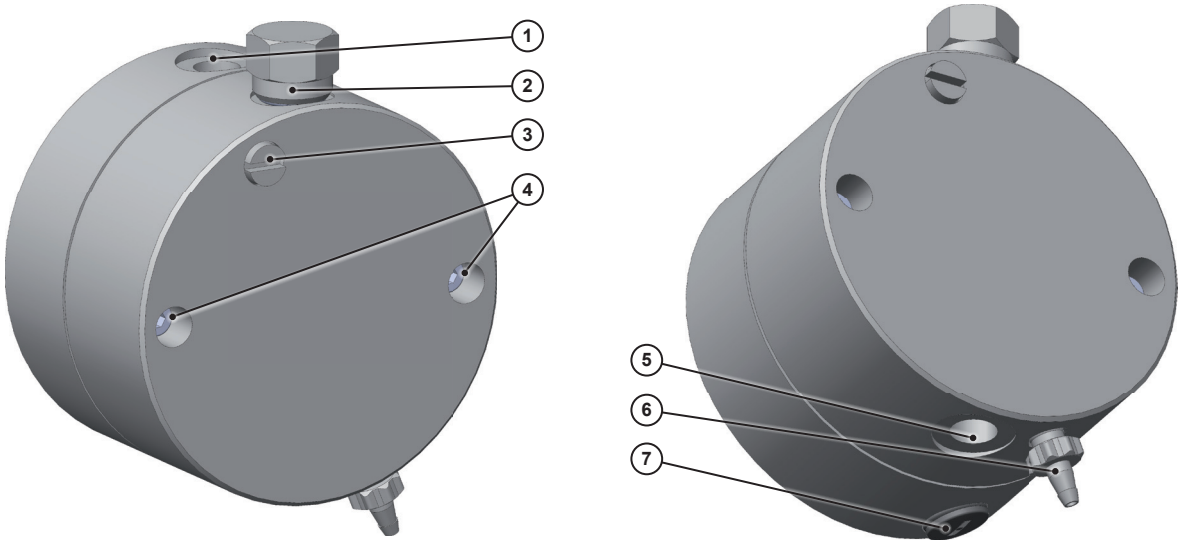

Fig. 1: The structure of the flow controller

Pos.	Description
1	Outlet connection
2	Inlet connection above (with sealing plugs)
3	Setting screw
4	Fixing screws
5	Inlet connection below
6	Extraction point
7	Temperature measurement point (with sealing plugs)

Table 4: Position numbers

4.3 Rating plate

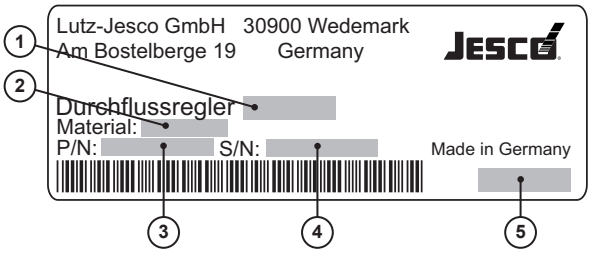

Fig. 2: Flow controller rating plate

No.	Description
1	Product name
2	Materials coming into contact with the media
3	Part number
4	Serial number
5	Manufacturing date

Table 5: Rating plate

5 Dimensions

All dimensions in millimetres (mm).

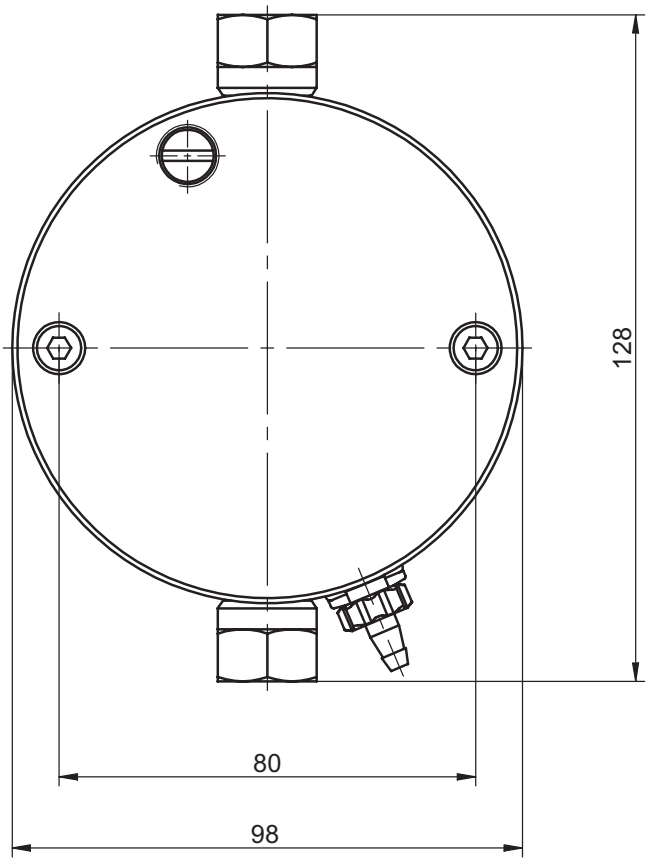

Fig. 3: Flow controller fore view

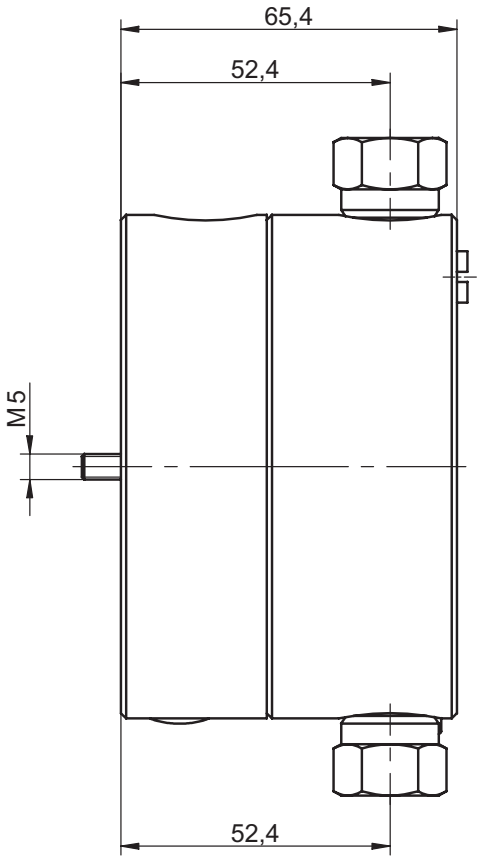

Fig. 4: Flow controller side view

6 Installation, start-up and operation

Note

Damage to the system due to incorrect installation

Failure to comply with the installation regulations can result in damage to the system parts.

⇨ Use suitable tools.

⇨ Tighten screw connections only hand tight.

⇨ Fit a sufficient water filter (e.g. 300 µm) in front of the flow controller to prevent its blockage.

6.1 Installing the flow controller

Pre-conditions for actions:

✓ Two boreholes with 8 cm clearance are prepared for wall mounting.

🛠 Two fixing screws (pos. 4) are provided.

🛠 Suitable tools have been provided.

Perform the following working steps:

1. Fit the flow controller on a level surface using the four fixing screws.
2. Install the outflow pipes on the outlet connection (pos. 1).
3. Install an inflow line on the inlet connection above (pos. 2) or on the inlet connection below (pos. 5).
4. Close the open inlet connection using the sealing plug.
5. Activate the throughflow and check all screw connections for leak-tightness.

✓ **You have successfully installed the flow controller.**

6.2 Adjusting the throughflow volume

Pre-conditions for actions:

✓ The installation of the flow controller was successful.

🛠 An external device for measuring the throughflow volume (e.g. a subsequent flow meter) is available.

Perform the following working steps:

1. Ensure that your external device for measuring the throughflow volume functions correctly.
2. Activate the throughflow.
3. Measure the throughflow and adjust the flow controller using the setting screw (pos. 3) until you have reached the desired throughflow volume.

✓ **You have successfully adjusted the throughflow volume.**

6.3 Taking a water sample

Pre-conditions for actions:

✓ The installation of the flow controller was successful.

Perform the following working steps:

1. Open the valve at the extraction point (pos 6).
2. Allow the water to run for min. 5 seconds, in order to guarantee the purity of the water sample.
3. Take a water sample from the process water.
4. Tighten the valve hand tight.

✓ **You have successfully taken the water sample.**

7 Maintenance

Products by Lutz-Jesco are manufactured to the highest quality standards and have a long service life. However, some parts are subject to operational wear. This means that regular visual inspections are necessary to ensure a long operating life. Regular maintenance will protect the device from operation interruptions.

7.1 Maintenance intervals

To avoid hazardous incidents, chlorinators must be regularly maintained. This table gives you an overview of maintenance work and the intervals at which you must carry it out. The next few sections provide instructions for carrying out this work.

Interval	Maintenance
Monthly	Check the throughflow volume and perform a renewed adjustment in accordance with Chapter 6.2 if necessary.
Annually	■ Renewing the O-rings ■ Renewing the diaphragm

Table 6: Maintenance intervals

7.2 Performing the annual maintenance

The flow controller must be subject to annual maintenance in order to guarantee its functionality.

Pre-conditions for actions:

✓ Throughflow was deactivated.

🛠 A maintenance set is available.

🛠 Suitable tools (e.g. a Ø 3 mm face spanner and a socket wrench AD19) are available.

🛠 Silicone grease for the O-rings is provided

Perform the following working steps:

1. Deinstall the inflow and outflow pipes from the flow controller.
2. Dismantle the flow controller using the four fixing screws (pos. 4).
3. Loosen the four housing screws on the rear-side of the flow controller and open carefully.
4. Replace all the O-rings in the flow controller. Lightly grease all the new O-rings with silicone grease before insertion.
5. Replace the diaphragm.
6. Check all further components for visible wear and replace if necessary.
7. Clean the components and the housing interior carefully using clear warm water.
8. Close the flow controller using the four housing screws.

▶ You have completed the annual maintenance.

9. Install the flow controller again in accordance with Chapter 6.1 „Installing the flow controller“ on page 11.
10. Adjust the throughflow volume again in accordance with Chapter 6.2 „Adjusting the throughflow volume“ on page 11.

✓ **You have successfully maintained, installed and re-commissioned the flow controller.**

7.3 Cross section

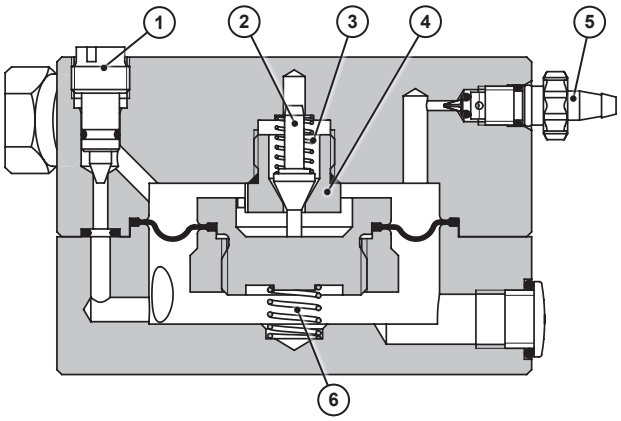

Fig. 5: Flow controller cross section

7.4 Spare parts and accessories

Spare parts

Numbering corresponds to Fig. 5 „Flow controller cross section“ on page 12.

No.	Description	Part number
-	Maintenance set: ■ Ring diaphragm Ø68/32x0.8 ■ O-ring Ø6x1,5 ■ O-ring Ø2x2 ■ O-ring Ø5x1,5 ■ O-ring Ø4x2 ■ O-ring Ø12x2 ■ O-ring Ø11,5x2,5 ■ O-ring Ø14x1,78	41510
1	Setting screw	38630
2	Control cone	41179
3	Compression spring Da 7.9	41186
4	Control nozzle	■ PVC: 41181 ■ PVDF: 41271
5	Valve at the extraction point	■ PVC: 38950 ■ PVDF: 38951
6	Compression spring Da 11	41185

Table 7: Spare parts

Accessories

Description	Part number
Temperature sensor Pt 100	41100022

Table 8: Accessories

8 Technical data

Description	Value
Materials	■ PVC / FPM / 1.4310 ■ PVDF / FPM / 1.4310
Throughflow volumes	15 - 45 l/h
Inlet pressure	0,2 - 6 bar
Max. water temperature	■ PVC: 40 °C ■ PVDF: 60 °C
Max. ambient temperature	40 °C
Inflow and outflows	G1/4 interior
Temperature measurement point	M12x1.5
Part numbers	■ PVC: 43900001 ■ PVDF: 43900002

9 Declaration of no objection

Please copy the declaration, stick it to the outside of the packaging and return it with the device.

Declaration of no objection

Please fill out a separate form for each appliance!

We forward the following device for repairs:

Device and device type: ..... Part-no.: .....

Order No.: ..... Date of delivery: .....

Reason for repair: .....

.....

.....

Dosing medium

Description: ..... Irritating: ☐ Yes ☐ No

Properties: ..... Corrosive: ☐ Yes ☐ No

We hereby certify, that the product has been cleaned thoroughly inside and outside before returning, that it is free from hazardous material (i.e. chemical, biological, toxic, flammable, and radioactive material) and that the lubricant has been drained.

If the manufacturer finds it necessary to carry out further cleaning work, we accept the charge will be made to us.

We assure that the aforementioned information is correct and complete and that the unit is dispatched according to the legal requirements.

Company / address: ..... Phone: .....

..... Fax: .....

..... Email: .....

Customer No.: ..... Contact person: .....

Date, Signature: .....

10 Warranty Application

Warranty claim

Please copy and send it back with the unit!

If the device breaks down within the period of warranty, please return it in a cleaned condition with the complete warranty claim.

Sender

Company: ..... Phone: ..... Date: .....

Address: .....

Contact person: .....

Manufacturer order no.: ..... Date of delivery: .....

Device type: ..... Serial number: .....

Nominal capacity / nominal pressure: .....

Description of fault: .....

.....

.....

.....

.....

.....

.....

.....

Service conditions of the device

Point of use / system designation: .....

.....

.....

Accessories used (suction line etc.): .....

.....

.....

.....

.....

Commissioning (date): .....

Duty period (approx. operating hours): .....

Please describe the specific installation and enclose a simple drawing or picture of the chemical feed system, showing materials of construction, diameters, lengths and heights of suction and discharge lines.

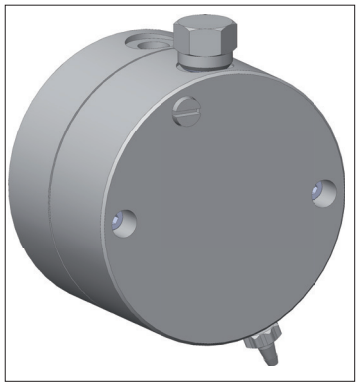

Lutz-Jesco GmbH

Am Bostelberge 19
D-30900 Wedemark

Phone: +49 5130 5802-0
info@lutz-jesco.com
www.lutz-jesco.com

Operating instructions
Flow controller DFR 45