Pressure safety shutoff valve
ChlorStop
Operating instructions

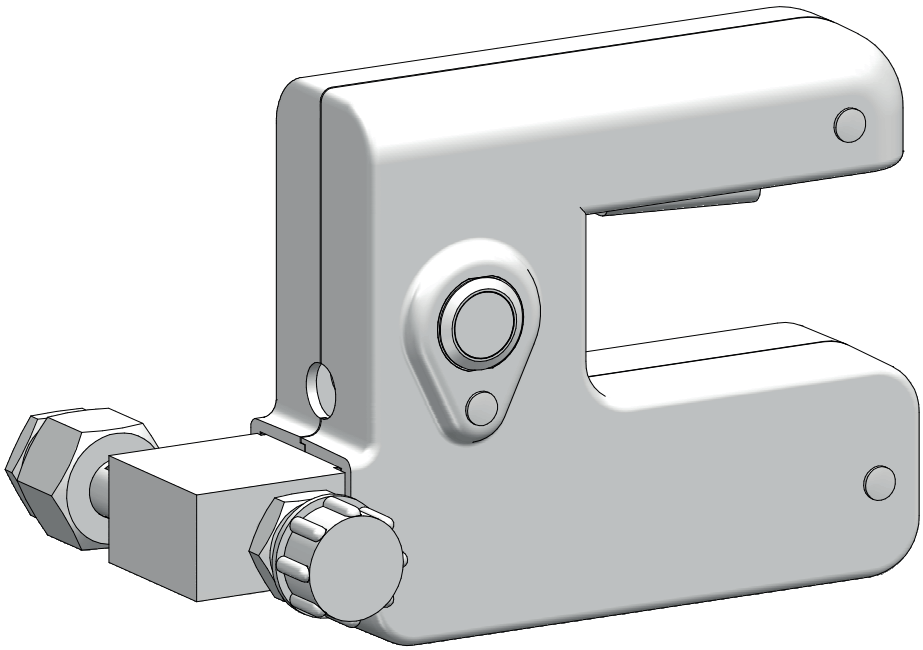

Read the operating manual!

The user is responsible for installation and operation related mistakes!

Original operating instructions

BA-22106-02-V03

Dosing Conveying Control | Liquids Gases Systems

Table of Contents

1 Notes for the Reader 4
1.1 General non-discrimination 4
1.2 Explanation of the signal words 4
1.3 Explanation of the warning signs 4
1.4 Identification of warnings 4
1.5 Identification of action instructions 4

2 Safety 5
2.1 General warnings 5
2.2 Information about chlorine 5
2.3 Hazards due to non-compliance with the safety instructions 5
2.4 Working in a safety-conscious manner 6
2.5 Personal protective equipment 6
2.6 Personnel qualification 6

3 Intended use 8
3.1 Notes on product warranty 8
3.2 Intended purpose 8
3.3 Permissible dosing media 8
3.4 Principles 8
3.5 Foreseeable misuse 8

4 Product description 9
4.1 Scope of delivery 9
4.2 Design and function 9
4.3 Rating plate 9

5 Technical data 10

6 Dimensions 11

7 Installation 12
7.1 Installation location 12
7.2 Mechanical installation 12
7.3 Electrical installation 13
7.4 Completing the installation 13
7.5 Installation example 14

8 Start-up 15
8.1 Leak test with chlorine gas and ammonia 15
8.2 Start-up 16

9 Operation 17
9.1 Function tests 17
9.2 Shutting down in an emergency 17

10 Shut-down 18
10.1 Short-term shut-down 18
10.2 Disposal 18

11 Maintenance 19
11.1 Maintenance intervals 19
11.2 Preparing the system for maintenance 19
11.3 Preparing the device for maintenance 19

12 Troubleshooting 23

13 EU Declaration of Conformity 24

14 Declaration of no objection 25

15 Warranty claim 26

16 Index 27

1 Notes for the Reader

This operating manual contains information and behaviour rules for the safe and designated operation of the device.

Observe the following principles:

- Read the entire operating manual prior to starting-up the device.
- Ensure that everyone who works with or on the device has read the operating manual and follows it.
- Maintain the operating manual throughout the service life of the device.
- Pass the operating manual on to any subsequent owner of the device.

1.1 General non-discrimination

In this operating manual, only the male gender is used where grammar allows gender allocation. The purpose of this is to make the text easy to read. Men and women are always referred to equally. We would like to ask female readers for understanding of this text simplification.

1.2 Explanation of the signal words

Different signal words in combination with warning signs are used in this operating manual. Signal words illustrate the gravity of possible injuries if the risk is ignored:

Signal word	Meaning
DANGER	Refers to imminent danger. Ignoring this sign may lead to death or the most serious injuries.
WARNING	Refers to a potentially hazardous situation. Failure to follow this instruction may lead to death or severe injuries.
CAUTION	Refers to a potentially hazardous situation. Failure to follow this instruction may lead to minor injury or damage to property.
PLEASE NOTE	Refers to a danger which, if ignored, may lead to risk to the machine and its function.

Tab. 1: Explanation of the signal words

1.3 Explanation of the warning signs

Warning signs represent the type and source of a danger:

Warning sign	Type of danger
	General danger
	Danger from poisonous substances
	Danger of hand injuries
	Danger of damage to machine or functional influences

Tab. 2: Explanation of the warning signs

1.4 Identification of warnings

Warnings are intended to help you recognise risks and avoid negative consequences.

This is how warnings are identified:

Warning sign	**SIGNAL WORD**

Description of danger.

Consequences if ignored.

⇨ The arrow signals a safety precaution to be taken to eliminate the danger.

1.5 Identification of action instructions

This is how pre-conditions for action are identified:

✓ Pre-condition for action which must be met before taking action.

🛠 A resource such as a tool or auxiliary materials required to perform the operating instructions.

This is how instructions for action are identified:

➔ Separate step with no follow-up action.

1. First step in a series of steps.

2. Second step in a series of steps.

▶ Result of the above action.

✓ **Action completed, aim achieved.**

2 Safety

2.1 General warnings

The following warnings are intended to help you eliminate the dangers that can arise while handling the device. Risk prevention measures always apply regardless of any specific action.

Safety instructions warning against risks arising from specific activities or situations can be found in the respective sub-chapters.

DANGER

Danger to life from chlorine poisoning!

Chlorine is poisonous. In severe cases, breathing in chlorine may lead to death. It irritates the eyes, the respiratory system and the skin.

- ⇨ Use sufficient personal protective equipment.
- ⇨ When carrying out any work on the system, use a respirator mask with a Type B gas filter that complies with EN 14387.
- ⇨ Always comply with the accident prevention regulations that apply at the place of use.
- ⇨ Get rid of leaks without delay. You must get rid of even very minor leaks without delay. Together with the humidity, chlorine forms hydrochloric acid and corrosion results in rapidly increasing leakage.
- ⇨ Use only chlorine-resistant seals.
- ⇨ Only use seals once. Reusing them leads to leaks.

DANGER

Danger to life from chlorine poisoning!

Chlorinators without gas warning devices are an increased safety risk, since it is not possible to detect escaping chlorine gas in good time or at all.

- ⇨ Install a gas warning device.

CAUTION

Increased risk of accidents due to insufficient qualification of personnel!

The device may only be installed, operated and maintained by personnel with sufficient qualifications. Insufficient qualification will increase the risk of accidents.

- ⇨ Ensure that all action is taken only by personnel with sufficient and corresponding qualifications.
- ⇨ Prevent access to the system for unauthorised persons.
- ⇨ Follow the specifications of section 2.5 “Personal protective equipment” on page 6.

PLEASE NOTE

Damage to the plant due to the formation of hydrochloric acid

Chlorine gas is highly hygroscopic. This means that humidity enters the system at any open connection on devices or pipes, which results in the formation of hydrochloric acid and contamination. thus inevitably causing damage to the units.

- ⇨ Keep all connections (including in the vacuum system and on all devices not currently in use) closed at all times.

2.2 Information about chlorine

Chlorine is a hazardous substance. The chemical element chlorine is a greenish-yellow, toxic gas with a pungent odour, which can be detected in the air at concentrations below 1 ppm (= 1 ml/m³).

Chlorine is 2.5 times heavier than air and accumulates at ground level.

Chlorine is extremely toxic for water organisms. The reason for the toxicity of chlorine is its extraordinary reactivity. It reacts with animal and vegetable tissue and thus destroys it.

Air with a chlorine gas content of 0.5 – 1 % leads to a quick death in mammals and humans, as it attacks the respiratory tract and the pulmonary alveolus (formation of hydrogen chloride or hydrochloride acid).

PLEASE NOTE

Faults due to insufficient chlorine quality

Impurities in the chlorine gas form deposits in devices and valves and can attack the components chemically. This can lead to malfunctions.

- ⇨ Only use technically pure chlorine that meets the following requirements:
  - Mass content of chlorine at least 99.5%
  - Water content max. 20 mg/kg

  Chlorine that complies with EN 937 meets these requirements

2.3 Hazards due to non-compliance with the safety instructions

Failure to follow the safety instructions may endanger not only persons, but also the environment and the device.

The specific consequences can be:

- Failure of major unit und system functions.
- Failure of required maintenance and repair methods
- Danger for individuals through dangerous dosing media
- Danger to the environment caused by chlorine leaking from the system

2.4 Working in a safety-conscious manner

Besides the safety instructions specified in this operating manual, further safety rules apply and must be followed:

- Accident prevention regulations
- Safety and operating provisions
- Safety regulations on handling hazardous substances
- Environmental protection provisions
- Applicable standards and legislation

2.5 Personal protective equipment

Based on the degree of risk posed by the dosing medium and the type of work you are carrying out, you must use corresponding protective equipment. Read the Accident Prevention Regulations and the Safety Data Sheets to the dosing media find out what protective equipment you need.

You will require the minimum of the following personal protective equipment:

Personal protective equipment required	
	Respirator mask
	Protective clothing
	Protective gloves
	Safety shoes

Tab. 3: Personal protective equipment required

Wear the following personal protective equipment when performing the following tasks:

- Installation
- Commissioning
- All work on gas-bearing sections of the plant
- Changing the chlorine tank
- Shut-down
- Maintenance work
- Disposal

2.6 Personnel qualification

Any personnel who work on the device must have appropriate special knowledge and skills.

Anybody who works on the device must meet the conditions below:

- Attendance at all the training courses offered by the owner
- Personal suitability for the respective activity
- Sufficient qualification for the respective activity
- Training in how to handle the device
- Knowledge of safety equipment and the way this equipment functions
- Knowledge of this operating manual, particularly of safety instructions and sections relevant for the activity
- Knowledge of fundamental regulations regarding health and safety and accident prevention
- All persons must generally have the following minimum qualification
- Training as specialists to carry out work on the device unsupervised
- Sufficient training that they can work on the device under the supervision and guidance of a trained specialist

These operating instructions differentiate between these user groups:

2.6.1 Specialist staff

Thanks to their professional training, knowledge, experience and knowledge of the relevant specifications, specialist staff are able to perform the job allocated to them and recognise and/or eliminate any possible dangers by themselves.

2.6.2 Trained electricians

Due to their professional training, knowledge and experience as well as knowledge of specific standards and provisions, trained electricians are able to do the electrical work assigned to them and to recognise and avoid any potential dangers by themselves.

They are specially trained for their specific working environment and are familiar with relevant standards and provisions.

They must comply with the legally binding regulations on accident prevention.

2.6.3 Trained persons

Trained persons have received training from the operator about the tasks they are to perform and about the dangers stemming from improper behaviour.

Trained persons have attended all trainings offered by the operator.

2.6.4 Personnel tasks

In the table below you can check what qualifications are the pre-condition for the respective tasks. Only people with appropriate qualifications are allowed to perform these tasks!

Qualification	Activities
Specialist staff	■ Transportation ■ Mechanical installation ■ Leak tests ■ Commissioning ■ Taking out of operation ■ Fault rectification ■ Maintenance ■ Repairs ■ Disposal
Trained electricians	■ Electrical installation
Trained persons	■ Storage ■ Control

Tab. 4: Personnel qualification

3 Intended use

3.1 Notes on product warranty

Any non-designated use of the device can impair its function and the protection provided. This leads to invalidation of any warranty claims!

Please note that liability is on the side of the user in the following cases:

- the device is operated in a manner which is not consistent with these operating instructions, particularly safety instructions, handling instructions and the section "Intended Use".
- Information on usage and environment (see section 5 “Technical data” on page 10) is not adhered to.
- If people operate the device who are not adequately qualified to carry out their respective activities.
- No original spare parts or accessories of Lutz-Jesco GmbH are used.
- Unauthorised changes are made to the device.
- The user uses different dosing media than those indicated in the order.
- Maintenance and inspection intervals are not adhered to as required or not adhered to at all.
- The device is commissioned before it or the corresponding system has been correctly and completely installed.
- Safety equipment has been bridged, removed or made inoperative in any other way.

3.2 Intended purpose

The Pressure safety shutoff valve ChlorStop is designed to stop the chlorine gas supply directly after a chlorine tank, immediately following a chlorine alarm or the detection of positive pressure.

3.3 Permissible dosing media

The device may only be used for the following media and substances:

- Gaseous chlorine
- Technically pure chlorine with a mass content of more than 99.5 %

3.4 Principles

The device was checked by the manufacturer prior to delivery. Perform a function test after installation. Follow the instructions in section 9.1 “Function tests” on page 17.

3.5 Foreseeable misuse

Information is outlined below regarding the device applications which are classified as non-intended use. This section is intended to allow you to detect possible misuse in advance and to avoid it.

Foreseeable misuse is assigned to the individual stages of the product lifetime:

3.5.1 Incorrect assembly

- Use of old or unsuitable seals on the connections
- Inadequate attachment of the components
- Unauthorised modification of the device

3.5.2 Incorrect start-up

- The commissioning of a damaged or incorrectly fitted device
- Commissioning by untrained personnel
- Commissioning with improperly functioning safety and protective equipment such as a gas warning device, flashlight, acoustic warning or chlorine neutralisation system

3.5.3 Incorrect operation

- Ignoring operational disturbances
- No leak test after changing the chlorine tanks

3.5.4 Incorrect maintenance

- No or irregular inspection of the correct function
- Carrying out maintenance and cleaning work during ongoing operation
- Failure to comply with the instructions during maintenance
- The installation and use of unsuitable spare parts
- Using the wrong dismantling tools

3.5.5 Incorrect disposal

- No proper disposal of device components and of replacement parts

4 Product description

4.1 Scope of delivery

Please compare the delivery note with the scope of delivery. The following items are part of the scope of delivery:

- ChlorStop with 15 m control line
- Connection seal
- Operating instructions

4.2 Design and function

4.2.1 Device design

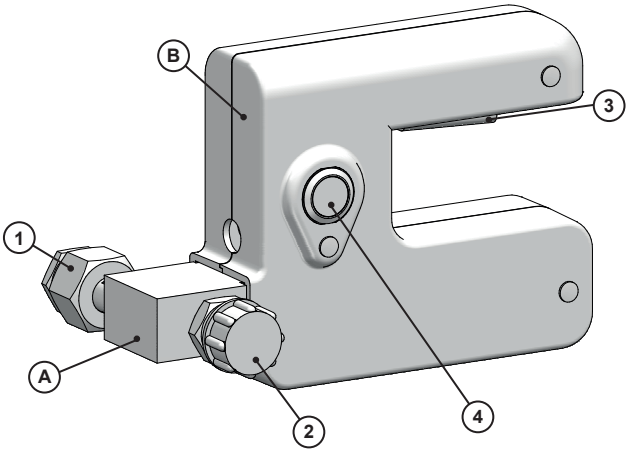

Fig. 1: Device design

No.	Description
A	Valve body
B	Housing
1	Chlorine input
2	Chlorine output
3	Stop lever
4	Pushbutton with ring lighting

Tab. 5: Components

The device consists of the valve body (A) and the housing (B). The valve body has a connection for the chlorine tank on the input side (1). For example, a vacuum regulator or a flexible connection line can be connected to the output side (2) of the valve body. The device is fitted with a stop lever (3) with which to open a valve. A pushbutton (4) with ring lighting is located on the front of the device. The valve can be closed manually using the pushbutton. The ring lighting indicates that the device is connected to the control and is ready for operation.

4.2.2 Function description

The device works in accordance with the fail-safe principle. This means that in idle position, the valve is held open by an electromagnet. Should the power supply to the magnet be interrupted, the valve will close immediately and the stop lever (3) visibly emerges from the housing as an indicator. The chlorine supply is interrupted, whatever the cause of the interruption of the power supply (chlorine alarm, cable break, actuation of the pushbutton on the device).

After the power supply to the device has been restored, the valve initially remains closed. Only the actuation of the stop lever (possible only on the device) will re-open the valve. This ensures that the system operator needs to locate the fault at its source which resulted in the interruption of the chlorine supply.

To enable the valves to close following a chlorine alarm, the device must be connected to a gas warning device via an external control unit. The pushbutton on the device serves maintenance and test purposes only.

4.3 Rating plate

There is information on the equipment about safety or the product's way of functioning. The information must stay legible for the duration of the service life of the product.

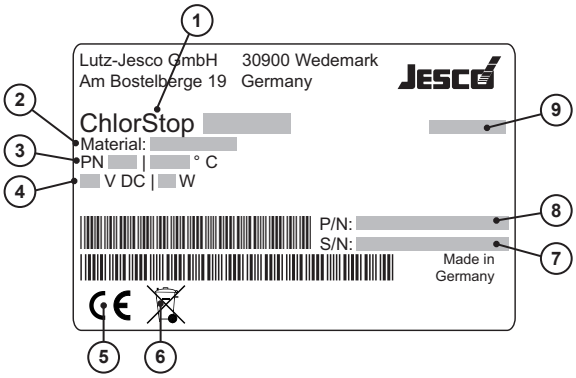

Fig. 2: Rating plate ChlorStop

No.	Description
1	Product designation and connection
2	Components coming into contact with the media
3	Pressure class/permissible ambient temperature
4	Control voltage
5	Label showing conformity with applicable European directives
6	WEEE label
7	Serial number
8	Part number
9	Month/year of manufacture

Tab. 6: Rating plate

5 Technical data

Information		Value
Nominal pressure		PN10
Operating mode		Closed current principle 100 % ED
Reaction time upon trigger	s	~1
Power consumption per valve	W	5
Supply voltage	V DC	24
Protection class		IP65
Ambient temperature	°C	0 – 55
Components coming into contact with the media		Monel, Hastelloy, FKM, brass (nickel-plated)
Weight	kg	1.8

Tab. 7: Technical data

6 Dimensions

All dimensions in mm

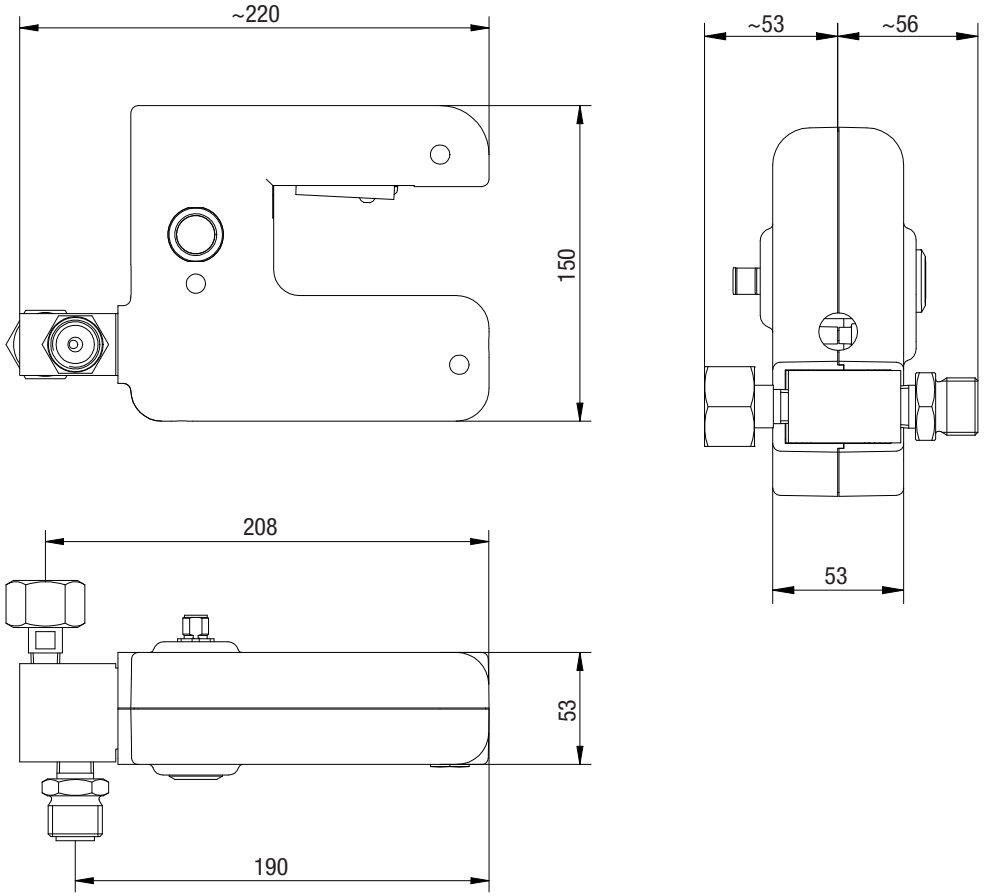

Fig. 3: Dimensional drawing

Input A	Output B
BSW 1“ BSW 1 1/4 G5/8 G3/4 1,030“-14 NGO (660)	BSW 1“ G5/8 G3/4 1.030“-14 NGO

Tab. 8: Input and output

7 Installation

DANGER

Danger to life due to incorrect installation

Faulty or incomplete installation of the device can result in a chlorine leak.

⇨ Only ever commission completely installed systems.

⇨ Open the chlorine tank valve only after installation has been completed.

⇨ Wear personal protective equipment when performing any work on the system.

PLEASE NOTE

Damage to the system due to incorrect installation

The failure to observe installation instructions (e.g. use of unsuitable tools, incorrect torque) can damage the system parts.

⇨ Use the tool intended for this purpose.

⇨ Note the specified torque.

7.1 Installation location

The device is installed directly on the outlet of a chlorine gas tank.

The room must fulfil the following minimum requirements:

- Complies with the locally valid prescriptions
- Secured against access by unauthorised persons
- Protected against weather conditions
- Frost-free
- Comply with the permissible ambient temperature (see section 5 “Technical data” on page 10).
- Direct outlet to the outside available
- The size of the room allows for easy installation and inspection and maintenance of the device at any time
- Good venting possible

7.2 Mechanical installation

7.2.1 Installation on a chlorine gas cylinder

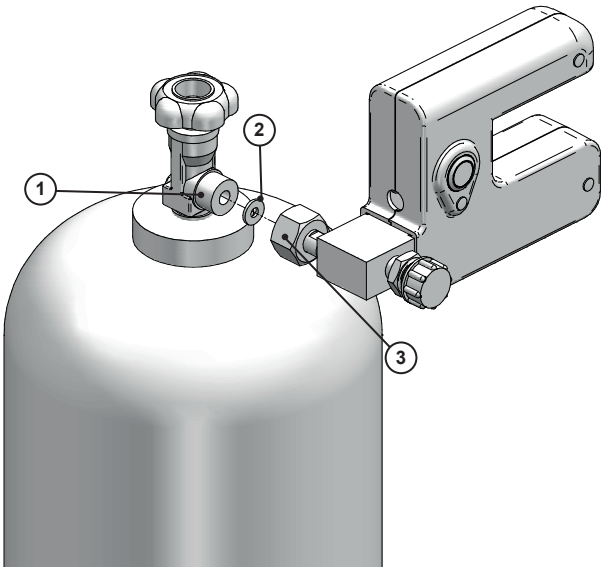

Fig. 4: Installing the device on a chlorine gas cylinder

Fig. 5: Precondition for action:

✓ The chlorine gas bottle is secured at the site of operation against falling.

✓ The sealing surfaces are free of soiling and damage.

✓ The seals are clean and dry.

Resources required:

🛠 Open-end spanner AF 32/40 and AF 13

🛠 Connection seals

Perform the following working steps:

1. Insert a new seal (2) on the inlet connection of the device.
2. Screw the device to the chlorine gas cylinder valve (1) using the union nut (3) of the inlet connection. Ensure that the device grip is level.
3. Tighten the union nut with approx. 40 Nm. Use the two open-end spanners for this task.

✓ **Device installed.**

7.2.2 Installation on a chlorine drum

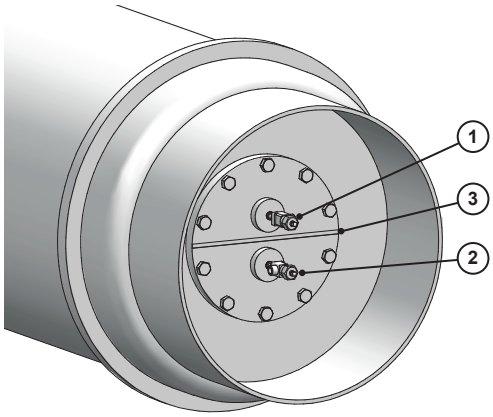

Fig. 6: Chlorine barrel

The chlorine drums are fitted with two tank valves. The upper valve (1) provides gaseous chlorine, the lower valve (2) provides fluid chlorine. The marking (3) on the drum must be located horizontally.

Precondition for action:

✓ The protective housing of the chlorine gas tank has been removed.

✓ The chlorine gas tank valve is closed.

✓ The screw cap on the connection of the tank valve has been removed

Resources required:

🛠 Open-end spanner AF 32/40 and AF 13

🛠 Connection seals

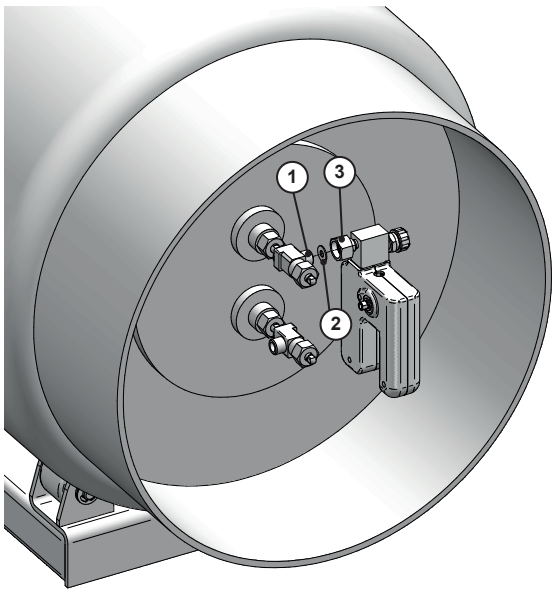

Fig. 7: Installation on a chlorine drum

Perform the following working steps:

1. Insert a new seal (2) on the inlet connection of the device.
2. Screw the device to the the tank valve (1) using the inlet connection union nut (3). Ensure that the device grip is level.
3. Tighten the union nut with approx. 40 Nm. Use the two open-end spanners for this task.

✓ **Device installed.**

7.3 Electrical installation

> The control line (15 m) connected to the device effects a connection to an external control unit. You can shorten or extend the line. The ends of the control line must be fitted with wire end sleeves.

Precondition for action:

✓ The device was installed in accordance with section “7.2 Mechanical installation”.

✓ A control unit with a 24 V control voltage is available.

✓ The mains voltage of the control unit was interrupted and secured against reactivation.

Resources required:

🛠 Documentation of the external control unit.

Plug type	PIN	Cable colour	PIN assignment
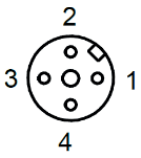	1	Brown	+24 V DC
	2	White	Earth (GND)
	3	Blue	Not used
	4	Black	

Tab. 9: PIN assignment A-coded plug of the control line

Perform the following working steps:

➔ Connect the device to the control unit. Comply with the specifications of the documentation.

➔ Ensure that the line has a length sufficient to enable the device to be dismantled during maintenance and tank change.

✓ **Electrical installation of the device completed.**

7.4 Completing the installation

➔ Check all electrical connections for their correct connection.

➔ Seal all drillholes that were made during the electrical installation so that they are gas-tight.

➔ Check all the mechanical connections for leak-tightness (see section 8.1 “Leak test with chlorine gas and ammonia” on page 15).

7.5 Installation example

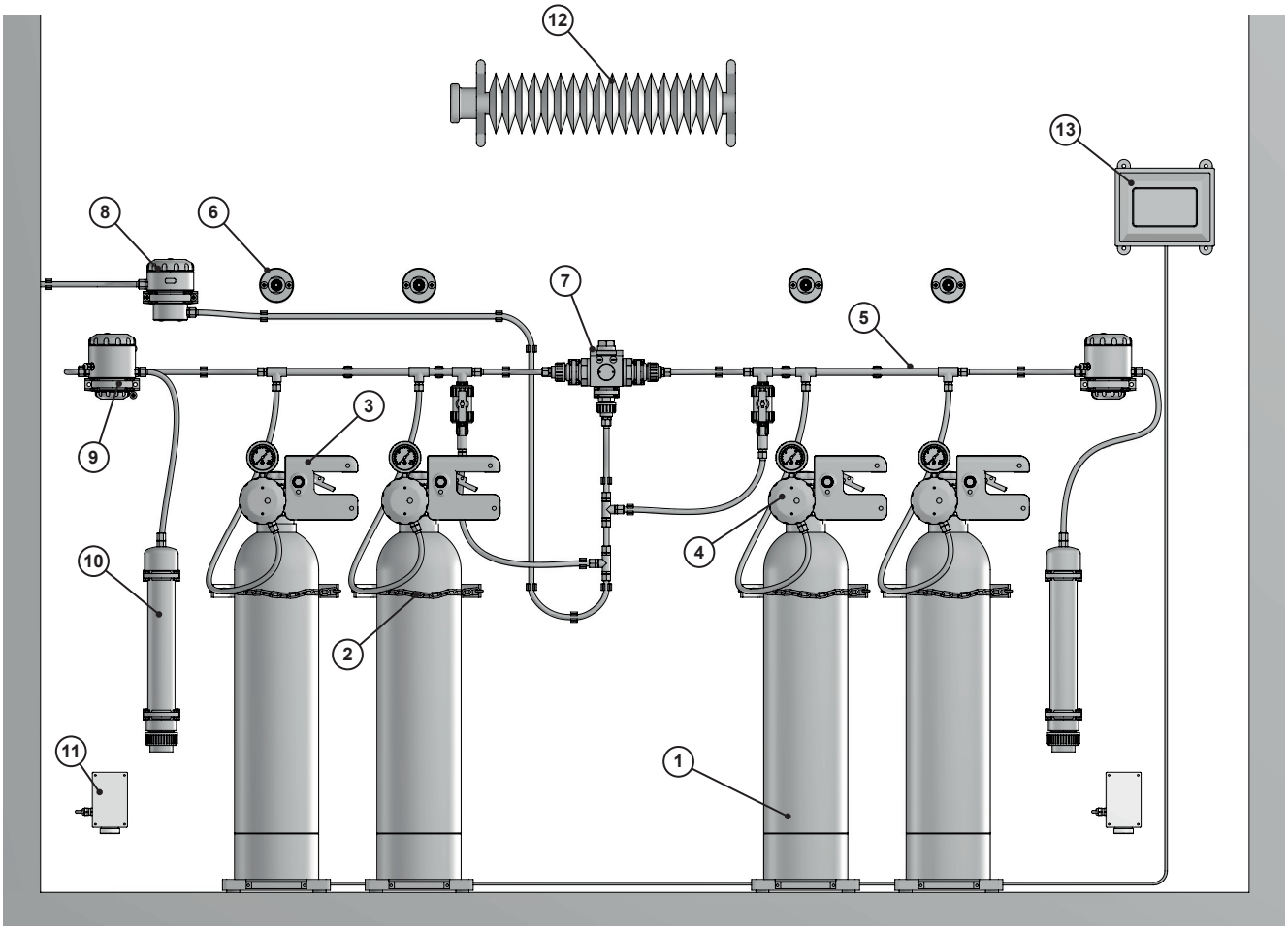

Fig. 8: Installation on chlorine gas cylinders

No.	Description
1	Chlorine gas bottle
2	Holding bracket
3	Pressure safety shutoff valve ChlorStop
4	Vacuum regulator with pressure gauge
5	Vacuum collective line
6	Wall holder
7	Vacuum changeover switch
8	Safety shutoff valve
9	Safety blow-off valve PLUS
10	Activated carbon cartridge
11	Gas sensor
12	Heater
13	Container scales

Tab. 10: Components

8 Start-up

8.1 Leak test with chlorine gas and ammonia

DANGER

Danger to life from chlorine poisoning!

If you start the leak test with chlorine gas before the entire system has been installed and the injectors are ready for operation, chlorine gas may not be extracted immediately in the event of a leak.

⇨ Make sure that all the components in the plant are installed correctly and the injectors are ready for operation before starting the leak test with chlorine gas.

⇨ Put on protective clothing before carrying out the leak test with chlorine gas.

Precondition for action:

✓ The device has been installed in accordance with section 7 “Installation” on page 12. The ring lighting illuminates.

✓ The device valve is closed.

✓ The chlorine tank valve is closed.

✓ All system parts are ready for operation.

✓ You are wearing personal protective equipment.

Resources required:

🛠 Cylinder with ammonia solution

🛠 Open-end spanner AF 32/40 and AF 13

Perform the following working steps:

1. Briefly open the chlorine container valve and close it again.
2. Hold the open bottle containing the ammonia solution close to the input connection and perform slight pumping motions. The ammonia steam with chlorine forms a white vapour and makes even very small leaks visible.

PLEASE NOTE

Damage to the plant by the ammonia solution

If the ammonia solution comes into contact with the plant, this leads to corrosion on the equipment.

⇨ Make sure that you do not spill any ammonia.

Leak-tightness must be checked in the open and closed state.

This inspection is conducted via two drill holes in the housing.

3. Insert the ammonia bottle in the lower drill hole and perform the pumping motions. The upper drill hole is for inspection purposes. Look for the development of white mist.

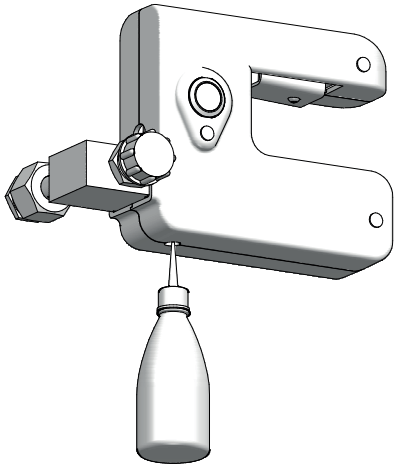

Fig. 9: Checking for leaks

If you find leaks:

1. Open the device valve by pulling the stop lever upwards.
2. Use the ejector to suck off the remaining chlorine.
3. Switch off the injector at the booster pump.
4. Close the device valve by actuating the pushbutton on the fore-side of the device.
5. If the leak point is located on the connection of the device to the tank valve, tighten the union nut.
6. Repeat the leak test.

If you do not find any leaks:

1. Repeat the inspection with an open device valve by pulling the stop lever to the upper end position.
2. Briefly open the chlorine container valve and close it again.
   ▶ The chlorine gas flows to the next component.
3. Hold the open bottle containing the ammonia solution close to the output connection and perform slight pumping motions. The ammonia steam with chlorine forms a white vapour and makes even very small leaks visible.
4. Insert the ammonia bottle in the lower drill hole and perform the pumping motions. The upper drill hole is for inspection purposes. Look for the development of white mist.

If you find leaks:

1. Use the injector to suck off the remaining chlorine.
2. Switch off the injector at the booster pump.
3. If the leak is located in the device, contact the manufacturer.

If you do not find any leaks:

1. Depressurise the system using the injector to evacuate the piping.
2. Switch off the injector at the booster pump.
3. Close the device valve by actuating the pushbutton on the fore-side of the device.

✓ **The leak test with chlorine gas has been carried out successfully.**

8.2 Start-up

Precondition for action:

✓ The leak test with chlorine has been carried out successfully.

✓ The device is connected to the control unit.

✓ The device is closed.

Perform the following working steps:

1. Switch the injector on.
2. Open the device valve by pulling the stop lever upwards.
3. Open the chlorine tank valve.

✓ **The device is ready for operation.**

> If the device is connected to the voltage supply and has been activated, the ring lighting on the device pushbutton will illuminate.

9 Operation

9.1 Function tests

During operation, check the device function following every tank change.

Precondition for action:

✓ There are no faults.

✓ The device is connected to the control unit and the device valve is open.

✓ The tank valve is open.

9.1.1 Function test with independent operation

Perform the following working steps:

1. Press the pushbutton on the device during operation. The valve closes suddenly.
2. Observe the pressure gauge display on the vacuum regulator.
   ▶ The pressure must fall to 0 bar.
3. Once the pressure has fallen to 0 bar, open the device valve again by pulling the stop lever upwards.

✓ **The function test has been performed successfully with independent operation.**

9.1.2 Function test with battery operation

Multiple chlorine tanks are connected with each other via a chlorine changeover unit to ensure a permanent chlorine supply. The chlorine tanks to the left and right-hand side of the changeover unit constitute a battery. Perform a function test on both sides of the changeover unit.

Precondition for action:

✓ There are no faults.

✓ The devices are connected to the control unit and the device valves are open.

✓ All tank valves are open.

Perform the following working steps:

1. Press the pushbutton on each device in the battery which is in operation one after the other. Observe the vacuum regulator pressure gauge in this battery whilst doing so.
   ▶ The pressure must fall to 0 bar.
2. Wait until the changeover unit has switched over to the second battery and supplies the system with chlorine.
3. Open the device valves by pulling the stop lever upwards.
4. Now close the device of the second battery by pressing the pushbutton on the devices. Observe the vacuum regulator pressure gauge in this battery whilst doing so.
   ▶ The pressure must fall to 0 bar.
5. Wait until the changeover unit has switched over to the first battery and supplies the system with chlorine.
6. Open the device valves of the second battery by pulling the stop lever upwards.

✓ **The function test has been performed successfully with battery operation.**

9.1.3 Function test with control unit

After every tank change, use the control unit to check whether all system devices close simultaneously. Then re-open the device valves by pulling the stop lever upwards.

9.2 Shutting down in an emergency

DANGER

Danger to life from chlorine escape!

Chlorine is poisonous. In severe cases, breathing in chlorine may lead to death. It irritates the eyes, the respiratory system and the skin.

⇨ If chlorine escapes, leave the room immediately.

⇨ Use sufficient personal protective equipment.

⇨ If chlorine gas escapes, wear a Type 2 self-contained breathing apparatus that complies with EN 137.

⇨ Only initiate counter measures after putting on the protective equipment.

Should large quantities of chlorine gas leak (an emergency situation), it will be detected by the gas sensors in the alarm system; the device will be closed. This ensures that the device is switched off at the same time, as the closure of the device interrupts the voltage supply to the device.

The further procedure depends on the type of accident and should be planned and executed by professional personnel.

10 Shut-down

10.1 Short-term shut-down

Perform the following working steps:

1. Close the chlorine tank valves.
2. Use the ejector to suck off the remaining chlorine gas.
3. Close the device by actuating the pushbutton on every individual device or simultaneously via the control unit.
4. Switch off the injector.

✓ **Chlorinator shut down for the short term.**

10.2 Disposal

- Before disposing of the old device, you must clean off the remaining chlorine gas by rinsing it with air.
- The device must be disposed of in accordance with applicable local laws and regulations. It should not be included with domestic waste.

As the disposal regulations may differ from country to country, please consult your supplier if necessary.

In Germany, the manufacturer must provide free-of-charge disposal. provided the device has been safely returned along with a declaration of no objection (see page 25).

11 Maintenance

Products by Lutz-Jesco are manufactured to the highest quality standards and have a long service life. However, some parts are subject to operational wear. This means that regular visual inspections are necessary to ensure a long operating life. Regular maintenance will protect the device from operation interruptions.

DANGER

Danger to life from chlorine poisoning!

Do not carry out maintenance or any other work on the chlorinator until the system has been decommissioned and all of the chlorine gas has been removed from the lines. The failure to follow this instruction presents a significant risk of injury.

⇨ Prior to any maintenance work, prepare the system in accordance with section 11.2 “Preparing the system for maintenance” on page 19.

⇨ Wear personal protective equipment when performing any work on the system.

CAUTION

Danger of crushing from tightened spring!

Opening the housing exposed the mechanics. The individual components are held in position by a pre-tightened spring. The sudden release of the spring can cause injury.

⇨ When working on an open housing, ensure that no body parts or objects enter the mechanics.

11.1 Maintenance intervals

This table gives you an overview of maintenance work and the intervals at which you must carry it out. The next few sections contain instructions for carrying out this work.

Interval	Maintenance
After 1 year	■ Cleaning the device ■ Replace the O-rings ■ Replace the filter ■ Replace the valve seat
After 3 years	■ Cleaning the device ■ Replace the valve connection ■ Replace the cylinder head screws

Tab. 11: Maintenance intervals

Local regulations can specify shorter maintenance intervals. The frequency of maintenance required is not dependant on the intensity of the device usage. The chemical wear of the plastics begins with the first contact with the medium.

11.2 Preparing the system for maintenance

Perform the following working steps:

1. Close the valves of the chlorine tanks.
2. Use the injector to suck off the remaining chlorine.
3. Disconnect the control unit from the voltage supply so that the valves close and the solenoid can cool. Secure the control unit against reactivation.
4. Switch off the injector.

✓ **The system is ready for maintenance.**

11.3 Preparing the device for maintenance

Pre-conditions for actions:

✓ The system has been prepared for maintenance (see chapter 11.3).

✓ The solenoid is voltage-free and has cooled.

Resources required:

🛠 Open-end spanner AF 32/40 and AF 13

Perform the following working steps:

1. Dismantle the vacuum regulator from the device and fit it on a wall bracket.
2. Dismantle the device from the chlorine tank and place the device on a suitable work surface close to the chlorine tank. Pay attention to where you place the control line and avoid tensile load.
3. Close all open connections on the device and the chlorine tank.

✓ **The device has been prepared for maintenance.**

Device maintenance

Pre-conditions for actions:

✓ The system has been prepared for maintenance.

✓ The system has been prepared for maintenance (see section 11.4).

✓ The respective maintenance set is available.

Resources required:

🛠 Cotton swabs

🛠 Cleaning alcohol

🛠 ool for dismantling O-rings

🛠 Allen key size 3, 4, 5 and 8

🛠 Open-end spanner AF 17

🛠 Pipe wrench

🛠 Metal grease*

* For all movable metal parts with the exception of the adjusting spindle and metal parts within the valve body.

11.3.1 Removing the housing

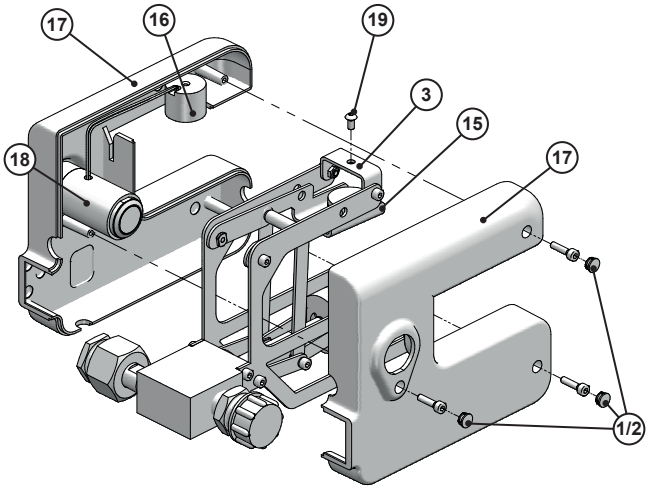

Fig. 10: Removing the housing

Perform the following working steps:

1. Remove the cover caps (2) and unscrew the screws underneath (1).
2. Pull the stop lever (15) upwards and disconnect the housing shell (17) from the metal carrier (3).
3. Unscrew the screws (19) which fix the solenoids (16) to the metal carrier.
4. Working carefully, remove the solenoids from the metal carrier. Make sure that the solenoid is connected with the control unit (18) via a cable. Set down the solenoids with the control unit in the housing shell.
5. Screw on the housing shells loosely. Re-insert the cover caps in the drill holes so that all the parts are available for later fitting.

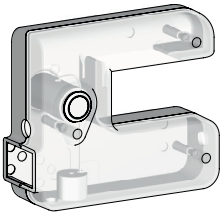

Fig. 11: Empty housing

✓ **Housing removed.**

11.3.2 Dismantling the valve body

Perform the following working steps:

1. Lift the lever (6) upwards and lock it with an approx. Ø5 mm pin (4). Unscrew the four screws (1) which fix the valve body (2) to the metal carrier (3).

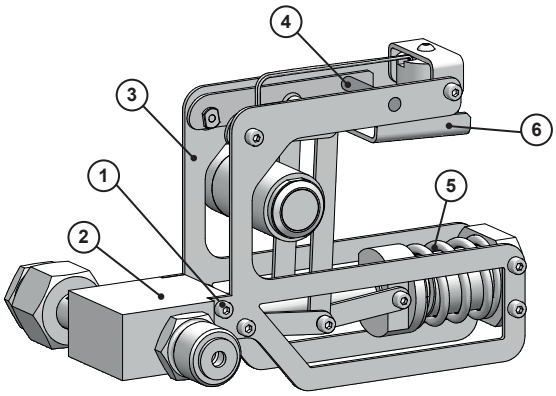

Fig. 12: Valve body with metal carrier

2. Remove the pin (4) and let the lever (6) down slowly. The spring (5) presses the valve body (2) away from the metal carrier (3).

Fig. 13: Dismantling the valve body

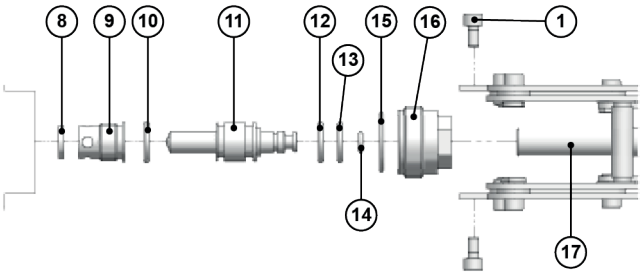

3. Remove the valve body (2) from the lifting rod (17).
4. Loosen the cap screw (16), remove positions (10) to (15) and dismantle the O-rings.
5. Unscrew and remove the valve connection (9) and remove the valve seat (8).

✓ **The valve body has been dismantled.**

11.3.3 Removing the filter

Pre-conditions for actions:

✓ The flat gasket has been removed.

✓ All parts are in a good condition.

Perform the following working steps:

1. Disconnect the connection nipple (1). Whilst doing so, insert the Allen key as far as possible to maximise the surface contact.

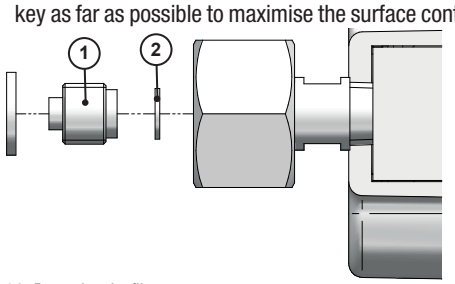

Fig. 14: Removing the filter

2. Remove the filter sieve (2) and check the drillhole for residue. Remove all filter residue from the drillhole.

✓ **The filter has been removed.**

11.3.4 Cleaning the device

Perform the following working steps:

1. Clean with warm water or isopropyl alcohol. Proceed with particular caution when cleaning any sealing surfaces.
2. Perform a visual check of all parts not included in the maintenance set and replace any damaged parts.

✓ **Device cleaned.**

11.3.5 Fitting the valve body

The position numbers relate partially to Fig. 12 “Valve body with metal carrier” on page 20 and Fig. 13 “Dismantling the valve body” on page 20.

Pre-conditions for actions:

✓ The parts have been dried well after cleaning.

✓ The parts are in a good condition.

✓ Wearing parts are available.

Perform the following working steps:

1. Slide the valve seat (8) into the valve body to its fullest extent.
2. Grease the thread of the valve connection (9) lightly and screw it into the valve body to its fullest extent.
3. Position the valve body vertically and insert the O-ring (15), lightly greased by fingertip, into the recess.
4. Apply a thin (invisible) layer of grease to the O-ring (13) with a fingertip and push the O-ring into the cap screw (16) to its fullest extent.

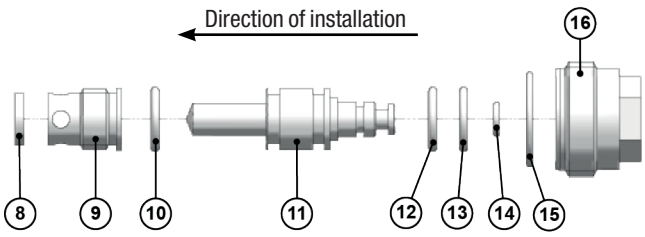

Fig. 15: Installing the valve body: detail view

5. Apply a thin (invisible) layer of grease on the O-rings (10, 12 and 14) with a fingertip and mount them on the tappet (11).
6. Insert the tappet (11) fitted with O-rings into the cap screw (16). Grease the thread of the cap screw lightly and tighten it to its fullest extent (approx. 30 Nm).
7. Pull the lever (6) upwards and lock it with the approx. Ø5 mm pin (4).
8. Place the valve body (2) in front of the lifting rod (17) and fix the protruding tappet (11) to the lifting rod.
9. Secure the valve body (2) loosely to the metal carrier (3) using the four screws (1) and tighten them crosswise.

✓ **The valve body has been installed.**

11.3.6 Installing the filter

The position numbers relate to Fig. 14 “Removing the filter” on page 20.

Pre-conditions for actions:

✓ The parts have been dried well after cleaning.

✓ All parts are in a good condition.

✓ Wearing parts are available.

Perform the following working steps:

1. Place the filter sieve (2) in the inlet connection.
2. Screw on the connection nipple (1) carefully to its fullest extent. Whilst doing so, insert the Allen key as far as possible to maximise the surface contact.

✓ **Filter installed.**

11.3.7 Leak test with nitrogen or compressed air

Pre-conditions for actions:

✓ The maintenance has been completed.

✓ The solenoid with the control unit has been dismantled.

✓ The valve is closed (stop lever down).

Perform the following working steps:

1. Connect nitrogen or dry compressed air to the valve body input.
2. Completely submerge the device in a water bath.
3. Set the pressure to approx. 10%.
4. Observe the valve body output and the diaphragm for a number of minutes. No bubbles may rise.
5. Remove the device from the water.
6. Connect the nitrogen / compressed air supply.
7. Perform pressure relief by pulling the stop lever upwards. Lock it in the drill holes intended for the purpose with an approx. Ø5 mm pin.

▶ The device valve is open and water flows out of the valve body.

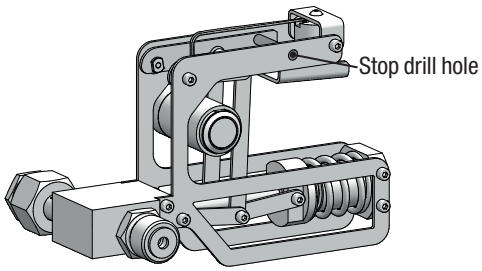

Fig. 16: Locking the lever

8. Seal the valve body output with a cap.
9. Repeat the leak test as described under points 2 to 5.

10. Close the nitrogen supply.

11. Remove the sealing cap and the locking pin.

12. Allow the device to dry well before proceeding.

✓ **The device has been checked for leaks.**

11.3.8 Fitting the housing

Pre-conditions for actions:

✓ All work on the device has been ended.

✓ A leakage test was performed.

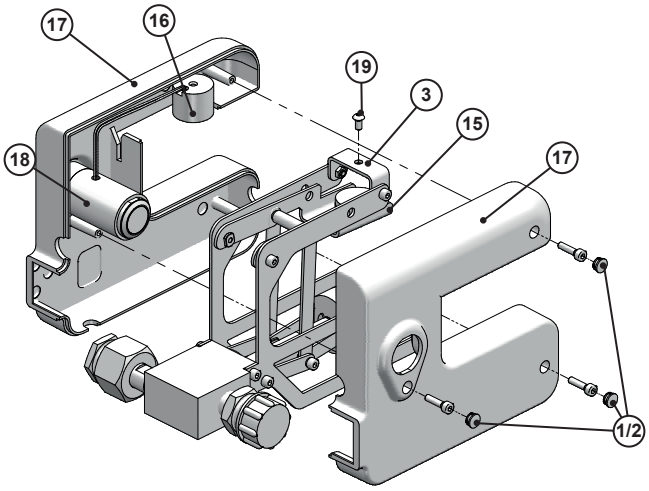

Fig. 17: Fitting the housing

Perform the following working steps:

1. Unscrew the screws (1) connecting the two housing shells.

2. Guide the solenoids (16) back to the metal bracket as shown in the figure and fix them with the screw.

3. Engage the stop lever (15) and guide the metal carrier into the lower housing shell.

4. Place the upper housing shell (17) on the lower housing shell. Make sure that no cables become jammed. The control unit (18) is aligned to the housing using the spanner flats.

5. Fix the housing shells with the three screws (1) and set the cover cap (2) on the drill holes.

✓ **The housing has been fitted.**

11.3.9 Finishing maintenance

Perform the following working steps:

1. Make a note of the date and scope of the maintenance performed.

2. Attach a sticker displaying the maintenance date to the device.

3. Fit the device in the system.

4. To restart the system, proceed in accordance with the instructions in section 8.2 “Start-up” on page 16.

✓ **Maintenance completed.**

12 Troubleshooting

See below for information about how to rectify faults on the device or the system. If you cannot eliminate the fault, please consult with the manufacturer on further measures or return the device for repair.

Fault	Possible cause	Remedy
The stop lever cannot be operated.	The stop lever has not yet been fixed to the pin on the metal carrier.	Remove the pin.
The stop lever does not remain in position.	The voltage supply to the solenoids has been interrupted. ■ Cable break between the device and control. ■ No control reset after an alarm or function test has been performed. ■ Cable break between the control unit and solenoid. When connecting the device to the "Control unit for ChlorStop": ■ No control unit reset after an alarm or function test has been performed.	■ Have an electrician check the electrical installation. ■ Contact the manufacturer. ■ Contact the manufacturer. ■ Reset the control (see operating manual “Control unit for ChlorStop”)
Chlorine smell in the room	Leakage from soiling or damage: ■ The connection seals from the chlorine tank and / or the vacuum regulator are soiled or damaged. ■ The diaphragm has been damaged.	■ Replace the connection seals and then perform a leak test (see section 8.1 “Leak test with chlorine gas and ammonia” on page 15). ■ Perform maintenance (see section “Device maintenance” on page 19).

Tab. 12: Troubleshooting

13 EU Declaration of Conformity

(DE) EU-Konformitätserklärung
Hiermit erklären wir, dass das nachfolgend bezeichnete Gerät aufgrund seiner Konzipierung und Bauart sowie in der von uns in Verkehr gebrachten Ausführung den einschlägigen grundlegenden Sicherheits- und Gesundheitsanforderungen der aufgeführten EG-Richtlinien entspricht. Bei einer nicht mit uns abgestimmten Änderung am Gerät verliert diese Erklärung ihre Gültigkeit.

(EN) EU Declaration of Conformity
We hereby certify that the device described in the following complies with the relevant fundamental safety and sanitary requirements and the listed EC regulations due to the concept and design of the version sold by us.
If the device is modified without our consent, this declaration loses its validity.

(FR) Déclaration de conformité UE
Nous déclarons sous notre propre responsabilité que le produit ci-dessous mentionné répond aux exigences essentielles de sécurité et de santé des directives CE énumérées aussi bien sur le plan de sa conception et de son type de construction que du modèle que nous avons mis en circulation.
Cette déclaration perdra sa validité en cas d'une modification effectuée sur le produit sans notre accord explicite.

(ES) Declaración de conformidad UE
Por la presente declaramos que, dados la concepción y los aspectos constructivos del modelo puesto por nosotros en circulación, el aparato mencionado a continuación cumple con los requisitos sanitarios y de seguridad vigentes de las directivas de la U.E. citadas a continuación.
Esta declaración será invalidad por cambios en el aparato realizados sin nuestro consentimiento.

(PT) Declaração de conformidade UE
Declaramos pelo presente documento que o equipamento a seguir descrito, devido à sua concepção e ao tipo de construção daí resultante, bem como a versão por nós lançada no mercado, cumpre as exigências básicas aplicáveis de segurança e de saúde das directivas CE indicadas.
A presente declaração perde a sua validade em caso de alteração ao equipamento não autorizada por nós.

Bezeichnung des Gerätes:	Druck-Sicherheits-Sperrventil
Description of the unit:	Pressure safety shutoff valve
Désignation du matériel:	Soupape d'arrêt de sécurité
Descripción de la mercancía:	Válvula de bloqueo de seguridad de presión
Designação do aparelho:	Válvula de retenção de segurança de pressão
Typ: **Type:**	ChlorStop
EG-Richtlinien: **EC directives:**	2006/42/EG 2014/30/EU
Harmonisierte Normen: **Harmonized standards:**	DIN EN 60204-1:2014-10 DIN EN 61000-6-4:2011-09 DIN EN 61000-6-3:2011-09 DIN EN 61000-6-2:2016-05 DIN EN 61000-6-1:2016-05
Dokumentationsbevollmächtigter: **Authorized person for documentation:**	Lutz-Jesco GmbH

Heinz Lutz
Geschäftsführer / Chief Executive Officer
Lutz-Jesco GmbH
Wedemark, 01.10.2017

Lutz-Jesco GmbH
Am Bostelberge 19
30900 Wedemark
Germany

14 Declaration of no objection

Please copy the declaration, stick it to the outside of the packaging and return it with the device.

Declaration of no objection

Please fill out a separate form for each appliance!

We forward the following device for repairs:

Device and device type: ..... Part-no.: .....

Order No.: ..... Date of delivery: .....

Reason for repair: .....

.....

.....

Dosing medium

Description: ..... Irritating: ☐ Yes ☐ No

Properties: ..... Corrosive: ☐ Yes ☐ No

We hereby certify, that the product has been cleaned thoroughly inside and outside before returning, that it is free from hazardous material (i.e. chemical, biological, toxic, flammable, and radioactive material) and that the lubricant has been drained.

If the manufacturer finds it necessary to carry out further cleaning work, we accept the charge will be made to us.

We assure that the aforementioned information is correct and complete and that the unit is dispatched according to the legal requirements.

Company / address: ..... Phone: .....

..... Fax: .....

..... Email: .....

Customer No.: ..... Contact person: .....

Date, Signature: .....

15 Warranty claim

Warranty claim

Please copy and send it back with the unit!

If the device breaks down within the period of warranty, please return it in a cleaned condition with the complete warranty claim.

Sender

Company: ..... Phone: ..... Date: .....

Address: .....

Contact person: .....

Manufacturer order no.: ..... Date of delivery:.....

Device type: ..... Serial number: .....

Nominal capacity / nominal pressure: .....

Description of fault:.....

.....

.....

.....

.....

.....

.....

.....

Service conditions of the device

Point of use / system designation:.....

.....

.....

Accessories used (suction line etc.):.....

.....

.....

.....

.....

Commissioning (date): .....

Duty period (approx. operating hours): .....

Please describe the specific installation and enclose a simple drawing or picture of the chemical feed system, showing materials of construction, diameters, lengths and heights of suction and discharge lines.

16 Index

C
Checking for leaks 15
With chlorine gas and ammonia 15
With nitrogen or compressed air 21
Commissioning 15

D
Declaration of no objection 25
Design 9
Dimensioned drawings 11
Dimensions 11
Disposal 18
Dosing media
Prohibited dosing media 8

E
Electrical installation 13
Emergency 17
EU Declaration of Conformity 24

F
Foreseeable misuse 8
Function description 9
Function tests 17

G
General warnings 5

H
Handling instructions
Marking 4
Hazards due to non-compliance with the safety instructions 5

I
Information about chlorine 5
Installation example 14
Installation location 12
Intended purpose 8
Intended use 8

M
Maintenance 19
Maintenance intervals 19
Mechanical installation 12

N
Notes for the Reader 4

O
Operation 17

P
Personal protective equipment 6
Personnel qualification 6
Personnel tasks 7
Product description 9
Product warranty 8
Prohibited dosing media 8

R
Rating plate 9
Removing the housing 20

S
Safety 5
Scope of delivery 9
Signal words
Explanation 4
Specialist staff 6

T
Technical data 10
Trained electricians 6
Trained persons 6
Troubleshooting 23

W
Warnings
General warnings 5
Marking 4
Warning sign
Explanation 4
Warranty claim 26
Working in a safety-conscious manner 6

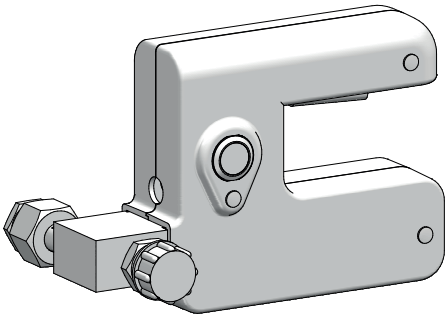

Lutz-Jesco GmbH

Am Bostelberge 19
D-30900 Wedemark

Phone: +49 5130 5802-0
info@lutz-jesco.com
www.lutz-jesco.com

Operating instructions
ChlorStop